CF Mag Stripe Reader Card

Series 4

User's Guide

socket®
Business Mobility Now!™

9/2009 **Document # 6410-00274 K**

COPYRIGHT NOTICE

Copyright © 2009 Socket Mobile, Inc. All rights reserved.

Socket, the Socket logo, Battery Friendly, SoMo, CF Mag Stripe Reader Card and SocketScan are trademarks or registered trademarks of Socket Mobile, Inc. All other brand and product names are trademarks of their respective holders.

The CF Mag Stripe Reader Card includes technology licensed under United States Patent No. 5,902,991.

Reproduction of the contents of this manual without the permission of Socket Mobile is expressly prohibited. Please be aware that the products described in this manual may change without notice.

Feel free to contact Socket Mobile at:

Socket Mobile, Inc.
39700 Eureka Drive
Newark, CA 94560-4808
USA

Other than the above, Socket Mobile can assume no responsibility for anything resulting from the application of information contained in this manual.

Please refrain from any applications of the CF Mag Stripe Reader Card that are not described in this manual. Please refrain from disassembling the CF Mag Stripe Reader Card. Disassembly of this device will void the product warranty.

You can track new product releases, software updates and technical bulletins by visiting the Socket Mobile website at: http://www.socketmobile.com

TABLE OF CONTENTS

COPYRIGHT NOTICE **2**

1 | INTRODUCTION **4**
- About the Software 4
- Package Contents 5
- System Compatibility 5
- Product Registration 5
- Accessory 5
- Software Development Kit (SDK) 6

2 | SETUP FOR THE SOMO 650 **7**
- STEP 1: Start SocketScan 8
- STEP 2: Insert the Card 9
- STEP 3: Open Your Application 10
- STEP 4: Swipe Data into Your Application 10

3 | SOCKETSCAN FOR WINDOWS MOBILE **11**
- Reader Settings 11
- Dual Device Support 12

APPENDICES

A SPECIFICATIONS **13**

B RESTRAINING BRACKET INSTALLATION **14**

C CAB FILE INSTALLATION **16**

D SETUP FOR NON SOMO PDAS **17**

E SETUP FOR WINDOWS XP / VISTA **20**

F SOCKETSCAN FOR WINDOWS XP / VISTA **24**

G TROUBLESHOOTING **25**

H TECHNICAL SUPPORT **26**

LIMITED WARRANTY **27**

REGULATORY COMPLIANCE **29**

1 | Introduction

Thank you for purchasing the CF Mag Stripe Reader Card 4E. The card reads data from one, two, or three track magnetic stripes on ID cards, driver's licenses, royalty cards or credit/debit cards into a Windows Mobile, XP or Vista based computer. It's the perfect solution for mobile Point of Sale applications, whether you want to eliminate long lines inside a department store or need to process credit cards at outdoor events.

The CF Mag Stripe Reader Card is great to combine with a cellular or wireless network to perform credit card authorizations, manage inventory and prices, and look up credit balances and other account information on the fly. For security applications, set up a mobile authentication system that wirelessly accesses database records for identity verification.

The CF Mag Stripe Reader Card can also be used with voter registration cards, health cards, and other identity documents.

Sleekly designed with no cables or batteries, the CF Mag Stripe Reader Card works in the CompactFlash or PC Card slot of compatible mobile computers.

About the Software

SocketScan

SocketScan™ keyboard wedge software feeds swiped data directly into any open program, as if the data were manually typed — no custom programming is required.

For software updates, please visit: http://www.socketmobile.com/support/downloads/

PACKAGE CONTENTS

CF Mag Stripe Reader Card

Restraining bracket for use with the Socket SoMo® 650 handheld computer

SocketScan™ installation CD (software & manuals)

SYSTEM COMPATIBILITY

The CF Mag Stripe Reader Card works with computers that satisfy these minimum requirements:

- Any of the following operating systems:
  - Windows Mobile 2003, 2003SE or 5.0 for Pocket PC
  - Windows Mobile 6 Classic
  - Windows XP Professional/Tablet PC (SP1, SP2, SP3)
  - Windows Vista Business/Ultimate (SP1)
- Available CompactFlash or PC Card slot
  (Operation in a PC Card slot requires a PC Card adapter)
- *Windows Mobile*: Software installation requires a Windows-based host computer with the appropriate synchronization software (ActiveSync or the Windows Mobile Device Center), available free on the Microsoft website.

  Alternatively, advanced users can install a CAB file. See Appendix B for instructions.

PRODUCT REGISTRATION

Socket highly recommends that all customers register their products. Registered users benefit from priority technical support and can choose to receive special offers for future products and product upgrades and the latest new product information

Register online at: http://support.socketmobile.com/

ACCESSORY

Socket offers a Type II CF-to-PC Card adapter, sold separately.
http://www.socketmobile.com/products/plug-in-data-capture/

SOFTWARE DEVELOPMENT KIT (SDK)

The CF Mag Stripe Reader Card uses the same SocketScan software and SDK used with all Socket data collection products, which also include bar code and RFID readers. The SocketScan SDK (not included) is required for more complex applications using parsed or encrypted data.

To learn about the SDK, visit: http://www.socketmobile.com/products/bluetooth-barcode-scanners/software-development-kit/

2 | SETUP FOR THE SOMO 650

This chapter shows how to install, configure, and use the CF Mag Stripe Reader Card on the Socket SoMo 650 handheld computer.

SETUP SUMMARY

STEP 1: Start SocketScan.
STEP 2: Insert the Card.
STEP 3: Open your application.
STEP 4: Swipe data into your application!

Note: SocketScan is pre-installed on the SoMo. You can choose to upgrade the software if a later version is available. Check for updates at:
http://www.socktmobile.com/support/downloads

STEP 1: START SOCKETSCAN

1. Tap **Start | Programs | SocketScan folder |SocketScan**.

2. Whenever SocketScan is running, either of two icons will appear appears at the bottom of the Today screen.

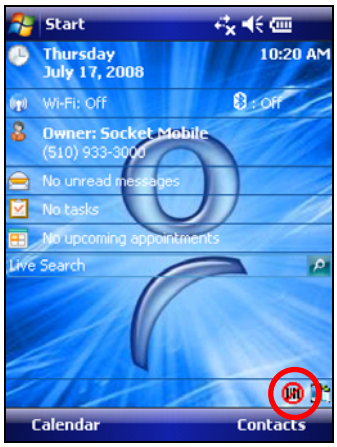

Icon	Meaning.
	No device detected.
	The CF Mag Stripe Reader Card is detected and ready to use.

STEP 2: INSERT THE CARD

Note: If desired, you can choose to install the Restraining Bracket included in the package. See Appendix B *for instructions.*

1. Open the card slot cover on the top of the SoMo and insert the CF Mag Stripe Reader Card into the CompactFlash card slot.

Be sure to insert the card all the way into the slot.
Do not insert the card upside-down.
Do not push the card in too hard, or you can damage the card and the card slot of your device.

Beep and LED Patterns

Note: Make sure your computer sound is turned on.

Beep Pattern	LED Behavior	Meaning
4 Beeps	Blinking Green and Red	SocketScan detects the CF Mag Stripe Reader Card.
No Beep	Solid Green	The CF Mag Stripe Reader Card is ready to swipe data.
1 Beep	Momentarily OFF	Successful swipe.
3 Beeps	Red	Bad swipe. No data read.

2. Make sure the SocketScan icon changes to indicate that the CF Mag Stripe Reader Card is detected.

STEP 3: OPEN YOUR APPLICATION

Open the application that you want SocketScan to feed swiped data into (e.g., Excel Mobile, Notepad, etc.). Place the cursor where you want the swiped data to go.

Note: If using Excel Mobile, you may want to increase the column width to fit the data.

STEP 4: SWIPE DATA INTO YOUR APPLICATION

1. Swipe a card through the reader, with the magnetic stripe facing the computer.

   Swipe smoothly in one motion, making sure the card is pressed flush against the slot for the entire length of the card. You can swipe the card either right-to-left or left-to-right.

2. When data is read, the LED will turn off momentarily before turning green again, and the Pocket PC will beep once. Additionally, data will appear in you document.

   If no data was read, the LED will turn red, and the Pocket PC will beep three times.

3. After data is read, it should appear in your document. The cursor will automatically advance to the next line or cell, ready for the next swipe.

3 | SocketScan for Windows Mobile

This chapter explains the application features of SocketScan software for Windows Mobile that are pertinent to the CF Mag Stripe Reader Card.

Reader Settings

The SocketScan applet lets you specify prefix and/or suffix characters to be added automatically to swiped data, as well as sounds to indicate good reads.

1. Tap on the SocketScan icon. In the pop-up menu, tap **Settings**.

   Note: You can configure these settings whether or not the CF Mag Stripe Reader Card is inserted into your device.

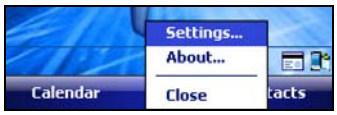

2. In the Prefix/Suffix screen, enter the characters you want to be appended to each swipe of data (128 character maximum).

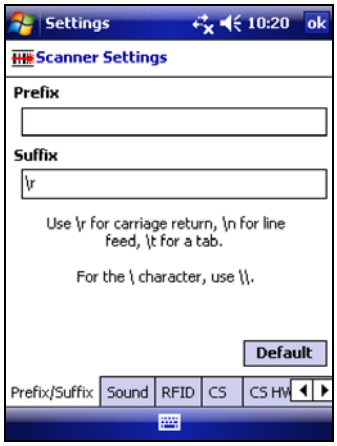

Note: Only printable ASCII characters can be used as prefixes or suffixes.

Note: The default suffix is a carriage return.

3. Tap on the **Sound** tab. Select a sound for indicating successful swipes.

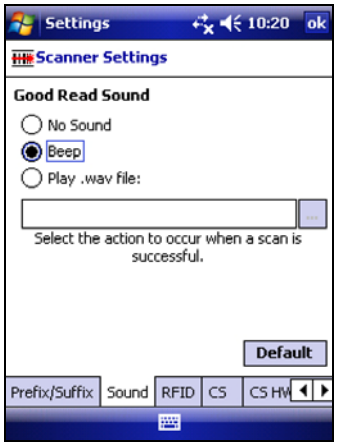

If you want to play a .WAV audio file**,** copy the file to the *My Documents* folder. In the SocketScan sound settings screen, select **Play .wav file** and tap the browse button (three dots). Browse to select the .WAV file in your *My Documents* folder.

4. After selecting all of your settings, tap **ok**.

Dual Device Support

SocketScan for Windows Mobile versions 7.2.4 and later support the simultaneous use of two Socket data collection devices with the same computer. This is ideal for combining magnetic stripe and cordless barcode reading in a complete mobile POS solution.

Simply connect or plug in each device you plan to use as you normally would. The functionality of each device is the same, and no extra configuration is required. You can configure each device separately. In the SocketScan menu, select a device to configure its settings.

APPENDIX A
SPECIFICATIONS

Physical Characteristics:
L x W x H: 2.7 x 2.2 x 1.3 inches (69 x 55 x 34 mm)
Total Mass: Approx. 1.6 oz (43 g)

Power Consumption (with 3.3 V):
Standby: 7 mA (23.1 mW)
Maximum: 12 mA (39.6 mW)

Environmental Conditions:
Operating Temperature: +14 to +140°F (-10 to +60°C)
Operating Relative Humidity: 10-90% non-condensing

Operating System Support:
-Windows Mobile 2003, 2003SE, 5.0 for Pocket PC/Pocket PC Phone
-Windows Mobile 6 Classic/Professional
-Windows XP Professional/Tablet PC (SP1, SP2, SP3)
-Windows Vista Business/Ultimate (SP1)

Interface Standards: CompactFlash Type II

Baud Rate: 19,200 bps

Mag Stripe Reader Data Structure: STX, DATA, CR, LF
SocketScan and SDK Data Structure: DATA

Magnetic Card Format: ISO TK1&2&3

Card Swiping Speed: 3-50 ips

Card Swiping Direction: Bi-directional

Included Software:
- Installation utility
- SocketScan™ software with keyboard emulation

Warranty: One year

Certification: FCC: Part 15, Class B, CE: EN55024:1998

APPENDIX B
RESTRAINING BRACKET INSTALLATION

for the Socket SoMo 650 handheld computer

Note: Removing the screws and card slot cover of the SoMo 650 to install the retaining bracket will not void the existing warranty on a SoMo 650 device.

1. Remove the card slot cover built into the SoMo 650. Use a flat head screwdriver to pry off the two rubber screw caps on the back of the SoMo 650.

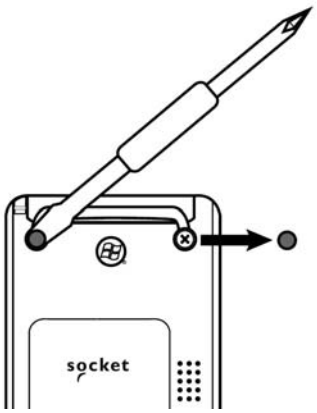

2. Use a Phillips screwdriver to remove the two screws.

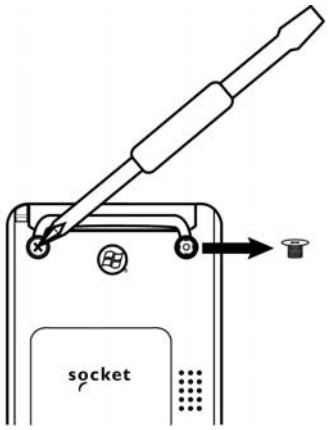

3. Remove the card slot cover.

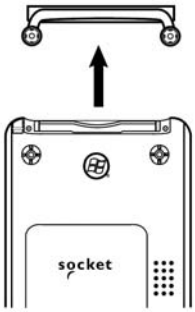

4. Insert the CF Mag Stripe Reader Card into the CompactFlash card slot at the top of the SoMo 650. Be sure to push the card all the way in.

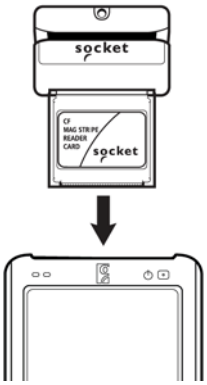

5. Put on the Restraining Bracket and fasten it to the SoMo with screws.

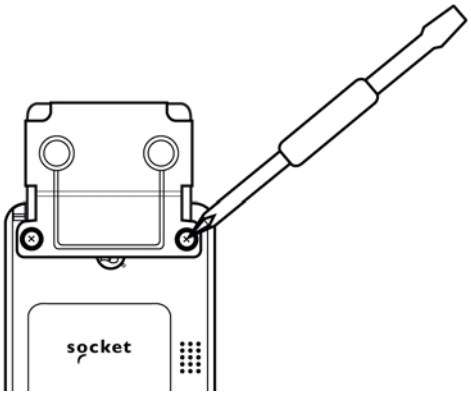

APPENDIX C
CAB FILE INSTALLATION

for Windows Mobile

Advanced Users Only!
If you do not want to use the application installer to install the Socket Mobile software, you can install a CAB (cabinet) file.

CAB files are available both on the installation CD and online at:
http://www.socketmobile.com/support/downloads/

In order to install the CAB file, you need a way to transfer the CAB file to your Windows Mobile-based device, such as:

- Use the Windows Vista Mobile Device Center or Microsoft ActiveSync to transfer the CAB file to your Windows Mobile device. ActiveSync 4.0 or greater is required.
- Use a memory card reader to save the CAB file from your desktop PC to a memory card, then insert the memory card into your Windows Mobile-based device.

1. Transfer the correct CAB file to your Windows Mobile device. Refer to the chart below to determine the correct CAB file for your device.

WindowsMobile Version	CAB File
5.0/6.0/6.1	Output.PPC2005ARMV4I
2003/2003SE	Output.PPC2203ARMV4

2. Tap **Start | Programs | File Explorer**.

3. Use File Explorer to browse to the CAB file. Tap on the CAB file.

4. The CAB file will start installing on your Windows Mobile device. Follow the instructions on your device screen to install the software.

5. Your device may warn that the CAB file comes from an unknown publisher. Tap **Yes** to continue installation.

6. After software installation, soft reset the device by pressing the reset button. If using the SoMo 650, use the stylus to press the reset button on the bottom of the device.

APPENDIX D
SETUP FOR NON SOMO PDAS

This chapter shows how to install, configure, and use the CF Mag Stripe Reader Card on a Windows Mobile powered device other than the Socket SoMo 650.

STEP 1: UNINSTALL OTHER SCANNING SOFTWARE

Refer to your PDA manual for instructions on how to delete any barcode scanning or keyboard wedge software already installed in your device, including previous versions of SocketScan.

STEP 2: INSTALL SOCKETSCAN SOFTWARE

Note: If you are using the SoMo 650, software installation is not necessary. SocketScan is pre-loaded on the device.

ADVANCED USERS: Refer to the README file for CAB installation instructions.

1. Use a serial/USB cable or cradle and the appropriate synchronization software (ActiveSync or the Windows Mobile Device Center) to make an active connection between your device and a host PC.

   Synchronization software is available free from the Microsoft website.

2. Insert the installation CD into your host PC.

3. Use **My Computer** or **Windows Explorer** to access your CD-ROM drive. In the CD, click on SETUP.EXE.

4. The SocketScan Setup Center will appear in your web browser. Read the first page and click **Installation** in the left margin.

5. In the SocketScan Installation page, in the Windows CE section, click **Install** in the first paragraph.

6. Your web browser will present a series of dialogs.

   Internet Explorer:
   - In the File Download –Security Warning dialog, click **Run**.
   - In the next warning dialog, click **Run**. Internet Explorer will download the file.

   Firefox:
   - In the file opening dialog, click **Save File**. Firefox will download the file.
   - In the Downloads list, next to SocketScanCE.exe, click **Open**.
   - In the warning dialog, click **OK** to continue.

7. The installation wizard will automatically begin. Follow the wizard to install the software.
8. When software installation is complete, remove the device from the cradle. Soft reset the device by pressing the reset button.

   Note: After software installation, several new icons will appear in the Programs screen.

   IMPORTANT! Soft reset your device, or some icons will not appear properly.

STEP 3: START SOCKETSCAN

Tap **Start | Programs | SocketScan folder |SocketScan**.

Whenever SocketScan is running, either of two icons will appear appears at the bottom of the Today screen.

Icon	Meaning.
	No device detected.
	The CF Mag Stripe Reader Card is detected and ready to use.

STEP 4: INSERT THE CARD

1. Insert the CF Mag Stripe Reader Card into the CompactFlash card slot of the PDA.

   Be sure to insert the card all the way into the slot.
   Do not insert the card upside-down.
   Do not push the card in too hard, or you can damage the card and the card slot of your device.

2. Make sure the SocketScan icon changes to indicate that the CF Mag Stripe Reader Card is detected.

   Beep and LED Patterns

   Note: Make sure your computer sound is turned on.

Beep Pattern	LED Behavior	Meaning
4 Beeps	Blinking Green and Red	SocketScan detects the CF Mag Stripe Reader Card.
No Beep	Solid Green	The CF Mag Stripe Reader Card is ready to swipe data.
1 Beep	Momentarily OFF	Successful swipe.
3 Beeps	Red	Bad swipe. No data read.

STEP 5: OPEN YOUR APPLICATION

Open the application that you want SocketScan to feed swiped data into (e.g., Excel Mobile, Notepad, etc.). Place the cursor where you want the swiped data to go.

Note: If using Excel Mobile, you may want to increase the column width to fit the data.

STEP 6: SWIPE DATA INTO YOUR APPLICATION

1. Swipe a card through the reader, with the magnetic stripe facing the computer.

   Swipe smoothly in one motion, making sure the card is pressed flush against the slot for the entire length of the card. You can swipe the card either right-to-left or left-to-right.

2. When data is read, the LED will turn off momentarily before turning green again, and the Pocket PC will beep once. Additionally, data will appear in you document.

   If no data was read, the LED will turn red, and the Pocket PC will beep three times.

3. After data is read, it should appear in your document. The cursor will automatically advance to the next line or cell, ready for the next swipe.

APPENDIX E
SETUP FOR WINDOWS XP / VISTA

This chapter shows how to set up and use the CF Mag Stripe Reader Card for use with a computer running any of the following operating systems:

- Windows XP Professional/Tablet PC (SP1, SP2, SP3)
- Windows Vista Business/Ultimate (SP1)

STEP 1: UNINSTALL OTHER SCANNING SOFTWARE

Uninstall any bar code scanning software already in your computer, including previous versions of SocketScan.

1. Make sure the bar code scanning software is not running, and remove the CF Mag Stripe Reader Card from your computer.
2. Click **Start | Control Panel**. For Windows Vista, click **Programs and Features**. For Windows XP, click **Add or Remove Programs**.
3. Use the utility to uninstall the program.

STEP 2: INSTALL SOCKETSCAN SOFTWARE

1. Make sure you are logged into an administrative account.
2. Insert the *SocketScan Installation CD* into your computer.
3. Use **My Computer** or **Windows Explorer** to access your CD-ROM drive. In the CD, click on SETUP.EXE.
4. The SocketScan Setup Center will appear in your web browser. Read the first page and click **Installation** in the left margin.
5. In the SocketScan Installation page, scroll down to the Windows XP and Windows Vista section. Click on the **Install** link there.
6. Your web browser will present a series of dialogs.

   Internet Explorer:
   - In the File Download –Security Warning dialog, click **Run**.
   - In the second warning dialog, click **Run**.

   Firefox:
   - In the file opening dialog, click **Save File**.
   - In the Downloads list, next to SocketScanCE.exe, click **Open**.

- In the warning dialog, click **OK** to continue.

7. The installation wizard will automatically begin. Follow the wizard to install the software.

8. During installation, a message will warn you about unsigned software. For Windows XP, click **Continue Anyway**. For Windows Vista, click **Install this driver software anyway**.

9. After completing the installation wizard, restart your computer.

10. After software installation, an icon for **SocketScan** will appear on your desktop.

STEP 3: INSERT THE CARD

1. Insert the CF Mag Stripe Reader Card into a CF-to-PC Card adapter.

2. Insert the combined unit into the PC Card (PCMCIA) slot of your computer.

3. After you insert the card, the computer will beep twice, and the green LED on the MSR will turn on. A status balloon will also appear.

   - Windows Vista: The balloon will report **Installing device driver software**, and the drivers will automatically install.

   - Windows XP: The balloon will report **Found New Hardware**, and a wizard will launch for you to install the drivers.

STEP 4: COMPLETE THE NEW HARDWARE WIZARD

Windows XP Only

Note: For Windows Vista, skip this step. Driver Installation is automatic.

1. After you insert the card into your computer, the Found New Hardware Wizard will automatically launch.

2. In the first screen, select **No, not this time** and click **Next**.

3. In the next screen, select **Install the software automatically (Recommended)**. Click **Next**.

4. When a screen warns that the software has not passed Windows logo testing. Click **Continue Anyway**.

5. Installation will begin. After installation is complete, in the last screen, click **Finish**.

6. After you complete the wizard, the computer will beep twice, and the LED on the MSR will turn off.

7. If prompted to restart your computer, please do so.

STEP 5: START SOCKETSCAN

1. Double-click on the SocketScan icon on your desktop.

2. When SocketScan starts and recognizes the MSR, the computer will beep two times, and the LED on the MSR will turn on, indicating that it is ready for a card swipe.

Beep and LED Patterns

Note: Make sure your computer sound is turned on.

Beep Pattern	LED Behavior	Meaning
4 Beeps	Blinking Green and Red	SocketScan detects the CF Mag Stripe Reader Card.
No Beep	Solid Green	The CF Mag Stripe Reader Card is ready to swipe data.
1 Beep	Momentarily OFF	Successful swipe.
3 Beeps	Red	Bad swipe. No data read.

3. Make sure the "CF Mag Stripe Reader Card detected" icon appears in the task tray.

Icon	Meaning.
	CF Mag Stripe Reader Card is detected and ready to use.
	No device detected.

Note:

- *If the computer does not beep, the LED does not blink and/or the SocketScan icon indicates that no card was detected, make sure the card is correctly inserted into the computer slot. Push it in all the way.*

- *If no SocketScan icon appears, start SocketScan by double-clicking on the SocketScan shortcut icon on your desktop.*

STEP 6: OPEN YOUR APPLICATION

Start the Windows application that you want SocketScan to feed swiped data into (e.g., Excel, Notepad, etc.). Place the cursor where you want swiped data to go.

Note: If using Excel, you may want to increase the width of the column to fit the data.

STEP 7: SWIPE DATA INTO YOUR APPLICATION

1. Swipe a card through the reader, with the magnetic stripe facing the computer. Swipe smoothly in one motion, making sure the card is pressed flush against the slot for the entire length of the card. You can swipe the card in either direction.

2. When data is read, the LED will turn off momentarily before turning green again, and the computer will beep once. Also, data will appear in you document. If no data was read, the LED will turn red, and the computer will beep three times.

3. After data is read, it should appear in your document. The cursor will automatically move to the next line or cell, ready for the next swipe.

Note: If your PC enters sleep mode, the MSR will be disabled until the PC resumes to normal and the keyboard or mouse is used. If you have a tablet PC, using the touch panel will NOT re-enable the MSR.

Removing the Card

1. Exit SocketScan. Click on the SocketScan icon at the bottom of the screen. In the pop-up menu, click Exit.

2. Click on the card removal icon. For Windows XP, click **Stop**.

Windows Version	Remove Hardware Icon
XP	
Vista	

3. When a message reports that it is safe to remove the card, press the card slot eject button to eject the device.

APPENDIX F
SOCKETSCAN FOR WINDOWS XP / VISTA

This appendix shows the application features of SocketScan for Windows XP/Vista.

READER SETTINGS

Note: The CF Mag Stripe Reader Card does not need to be inserted into the computer in order to change the sound or prefix/suffix settings.

1. Click on the SocketScan icon. In the pop-up menu, click **Settings.**
2. Enter the following settings:
   - **Good read notification sound:** Select a sound for the computer to play to indicate that data has successfully been read. If you select **Play a .WAV fil**e, click **Browse** to select the file.
   - **Prefix/Suffix:** Enter characters that you would like to be added before and/or after each swipe of data (128 character maximum, only printable ASCII characters). The default suffix is a carriage return.
   - **Display "Settings" option in the SocketScan tray icon menu:** Check this box if you plan to use the MSR with another Socket data collection device on this PC. The icon provides a submenu in the SocketScan pop-up menu to enable you select which device you are configuring.
3. Click **OK**.

DUAL DEVICE SUPPORT

SocketScan for Windows XP and Windows Vista versions 6.4.2 and later support the simultaneous use of two Socket data collection devices with the same computer. This is ideal for combining magnetic stripe and cordless bar code reading capability in a complete mobile POS solution.

Simply connect or plug in each device you plan to use as you normally would. The functionality of each device is the same, and no extra configuration is required.

You can configure each device separately. In the SocketScan menu, click Settings. In the dialog that appears, select the device you want to configure.

APPENDIX G
TROUBLESHOOTING

For help on SocketScan on a Pocket PC, tap **Start | Help**.

SYMPTOM: *I get the "No Card Detected"* *icon in the task tray and can't swipe any data.*

POSSIBLE REASON	SOLUTION
Your mobile computer does not recognize the CF Mag Stripe Reader Card.	Make sure the CF Mag Stripe Reader Card is inserted properly. If necessary, remove and reinsert. If using battery power on a Pocket PC, be sure to tap **Yes** if asked if you want to use battery power.

SYMPTOM: *When I try to swipe data, no data appears on my screen.*

POSSIBLE REASON	SOLUTION
The magnetic stripe is facing up.	While swiping the card, make sure the magnetic stripe is facing down.
The magnetic stripe is damaged.	Try swiping another card in good condition.
The magnetic stripe uses an incompatible format.	The CF Mag Stripe Reader Card can only read magnetic cards with the ISO TK1&2&3 formats.

APPENDIX H
TECHNICAL SUPPORT

If you have trouble installing or using CF Mag Stripe Reader Card, Socket has two technical support resources to help you. Please note that technical support is available in English only.

Online Knowledge Base:
Search for articles, Frequently Asked Questions or Hot Topics any time, day or night.
http://support.socketmobile.com/faq

Online Requests:
Register your product and submit a question. http://support.socketmobile.com/

By Phone:
- USA & Canada Toll-Free: 800-279-1390
- Direct: +1-510-933-3020

Please refrain from disassembling the CF Mag Stripe Reader Card. Disassembly of this device will void the product warranty.

LIMITED WARRANTY

Socket Mobile, Inc. (Socket) warrants this product against defects in material and workmanship, under normal use and service, for one (1) year from the date of purchase.

EXCLUDES: Consumables such as batteries, removable cables, cases, straps, chargers, and CF-to-PC Card adapters (90 day coverage only)

Incompatibility is not a defect covered by the Socket warranty. During the warranty period, Socket will, at its option, repair or replace the defective product at no charge when furnished with proof of retail purchase, provided that you deliver the product to Socket or to an authorized Socket Service Center.

The returned product must be accompanied by a return material authorization (RMA) number issued by Socket or by a Socket Authorized Service Center. If you ship the product, you must use the original container or equivalent and you must pay the shipping charges to Socket. Socket will pay shipping surface charges back to any location in the contiguous United States. This warranty applies only to the original retail purchaser and is not transferable.

Socket may, at its option, replace or repair the product with new or reconditioned parts and the returned product becomes the property of Socket. Socket warrants the repaired or replaced products to be free from defects in material or workmanship for ninety (90) days after the return shipping date, or for the remainder of the original warranty period, whichever is greater.

This warranty does not cover the replacement of products damaged by abuse, accident, misuse or misapplication, nor as a result of service or modification other than by Socket unless specifically described by Socket in product documentation.

SOCKET IS NOT RESPONSIBLE FOR INCIDENTAL OR CONSEQUENTIAL DAMAGES RESULTING FROM BREACH OF ANY EXPRESS OR IMPLIED WARRANTY, INCLUDING DAMAGE TO PROPERTY AND, TO THE EXTENT PERMITTED BY LAW, DAMAGES FOR PERSONAL INJURY. THIS WARRANTY IS IN LIEU OF ALL OTHER WARRANTIES INCLUDING IMPLIED WARRANTIES OF MERCHANTABILITY AND FITNESS FOR A PARTICULAR PURPOSE.

Some states do not allow limitation of implied warranties, or the exclusion or limitation of incidental or consequential damages, so that the above limitations or exclusions may not apply to you. This warranty gives you specific legal rights and you may also have other rights which vary from state to state.

This product may contain fully tested, recycled parts, warranted as if new.

For warranty information, please visit: http://support.socketmobile.com/

DISCLAIMER

EXCEPT TO THE EXTENT EXPRESSLY WARRANTED BY SOCKET, THIS PRODUCT IS PROVIDED "AS IS" WITHOUT WARRANTY OF ANY KIND, EXPRESS OR IMPLIED, INCLUDING WITHOUT LIMITATION, THE IMPLIED WARRANTIES OF MERCHANTABILITY OR FITNESS FOR A PARTICULAR PURPOSE. EXCEPT TO THE EXTENT REQUIRED BY LAW, SOCKET DOES NOT ASSUME ANY PRODUCT LIABILITY ARISING OUT OF, OR IN CONNECTION WITH, THE APPLICATION OR USE OF ANY PRODUCT OR APPLICATION DESCRIBED HEREIN.

LIMITED SOFTWARE WARRANTY

LIMITED WARRANTY. Socket Mobile, Inc. (Socket) warrants that the original disk or CD ROM is free from defects for 90 days from the date of delivery of the SOFTWARE.

CUSTOMER REMEDIES. The entire liability of Socket and your exclusive remedy shall be, at the option of Socket, either (a) return of the price paid or (b) replacement of the SOFTWARE which does not meet the Socket Limited Warranty and which is returned to Socket with a copy of your receipt. Any replacement SOFTWARE will be warranted for the remainder of the original warranty period or 30 days, whichever is longer. THESE REMEDIES ARE NOT AVAILABLE OUTSIDE OF THE UNITED STATES OF AMERICA.

NO OTHER WARRANTIES. Socket disclaims all other warranties, either express or implied, including but not limited to implied warranties of merchantability and fitness for a particular purpose, with respect to the SOFTWARE and the accompanying written materials. This limited warranty gives you specific legal rights. You may have others which vary from state to state.

NO LIABILITY FOR CONSEQUENTIAL DAMAGES. In no event shall Socket or its suppliers be liable for any damages whatsoever (including, without limitation, damages for loss of business profits, business interruption, loss of business information, or other pecuniary loss) arising out of the use of or inability to use the SOFTWARE, even if Socket has been advised of the possibility of such damages. Because some states do not allow the exclusion or limitation of liability for consequential or incidental damages, the above limitation may not apply to you.

EXPORT LAW ASSURANCES. You may not use or otherwise export or reexport the SOFTWARE except as authorized by United States law and laws of the jurisdiction in which the SOFTWARE was obtained. In particular, but without limitation, none of the SOFTWARE may be used or otherwise exported or reexported (a) into (or to a national or resident of) a United States embargoed country or (b) to anyone on the U.S. Treasury Department's list of Specially Designated Nationals or the U.S. Department of Commerce's Table of Denial Orders. By using the SOFTWARE, you represent and warrant that you are not located in, under control of, or a national or resident of any such country or on any such list.

GOVERNMENT END USERS. If the SOFTWARE is supplied to the U. S. Government, the SOFTWARE is classified as "restricted computer software" as defined in clause 52.227-19 of the FAR. The U. S. Government 's rights to the SOFTWARE are as provided in clause 52.227-19 of the FAR.

CONTROLLING LAW AND SEVERABILITY. This License shall be governed by the laws of the United States and the State of California. If for any reason a court of competent jurisdiction finds any provision, or portion thereof, to be unenforceable, the remainder of this License shall continue in full force and effect.

REGULATORY COMPLIANCE

This equipment has been tested and found to comply with the limits for a Class B digital device, pursuant to Part 15 of the FCC rules. This equipment is also CE EN55024:1998 and C-TICK compliant. These limits are designed to provide reasonable protection against harmful interference when the equipment is operated in a commercial environment.

This equipment generates, uses, and can radiate radio frequency energy and, if not installed and used in accordance with the instruction manual, may cause harmful interference to radio communications. Operation of this equipment in a residential area may cause harmful interference in which case the user will be required to correct the interference at his or her own expense.

If this equipment does cause harmful interference to radio or television reception, which can be determined by turning the equipment off and on, the user may try to correct the interference by doing any of the following:

- Reorient or relocate the receiving antenna of the radio or television.
- Increase the distance separating the equipment and the receiver.
- Connect the equipment to an outlet on a different branch circuit than that of the receiver.
- Consult the dealer or an experienced radio/TV technician for help.

The user may find the following booklet helpful: *How to Identify and Resolve Radio-TV Interference Problems.* This booklet is available from the U.S. Government Printing Office, Washington, D.C. 20402

PRODUCT DISPOSAL: Your device should not be placed in municipal waste. Please check local regulations for disposal of electronic products.

.

9/2009 Printed in U.S.A.